TLS7F
Standard Compressor
R134a
220-240V 50Hz

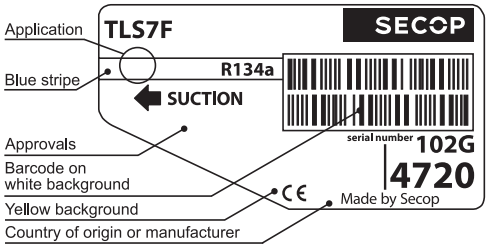

General

Code number	102G4720
Approvals	EN 60335-2-34 w. Annex AA
Compressors on pallet	125

Application

Application		LBP	
Frequency	Hz	50	60
Evaporating temperature	°C	-35 to -10	–
Voltage range	V	198 - 254	–
Max. condensing temperature continuous (short)	°C	60 (70)	–
Max. winding temperature continuous (short)	°C	125 (135)	–

Cooling requirements

Frequency	Hz	50			60		
Application		LBP	MBP	HBP	LBP	MBP	HBP
32°C		S	–	–	–	–	–
38°C		S	–	–	–	–	–
43°C		–	–	–	–	–	–
Remarks on application: run capacitor 4 µF compulsory in 38°C ambient temperature							

S = Static cooling normally sufficient
O = Oil cooling
F_1 = Fan cooling 1.5 m/s (compressor compartment temperature equal to ambient temperature)
F_2 = Fan cooling 3.0 m/s necessary
SG = Suction gas cooling normally sufficent
– = not applicable in this area

Motor

Motor type		RSIR/RSCR/CSIR	
LRA (rated after 4 sec. UL984), HST | LST	A	5.7	5.4
Cut in Current, HST | LST	A	5.7	9.7
Resistance, main | start winding (25°C)	Ω	14.5	14.8

Design

Displacement	cm^3	6.49
Oil quantity (type)	cm^3	180 (polyolester)
Maximum refrigerant charge	g	400
Free gas volume in compressor	cm^3	1790
Weight without electrical equipment	kg	7.5

Dimensions

Height	mm	A	173
		B	169
		B1	–
		B2	–
Suction connector	location/I.D. mm | angle	C	6.2 | 30°
	material | comment		Cu-plated steel | Al cap
Process connector	location/I.D. mm | angle	D	6.2 | 31.5°
	material | comment		Cu-plated steel | Al cap
Discharge connector	location/I.D. mm | angle	E	5.0 | 28°
	material | comment		Cu-plated steel | Al cap
Oil cooler connector	location/I.D. mm | angle	F	–
	material | comment		–
Connector tolerance	I.D. mm		±0.09, on 5.0 +0.12/+0.20
Remarks:			

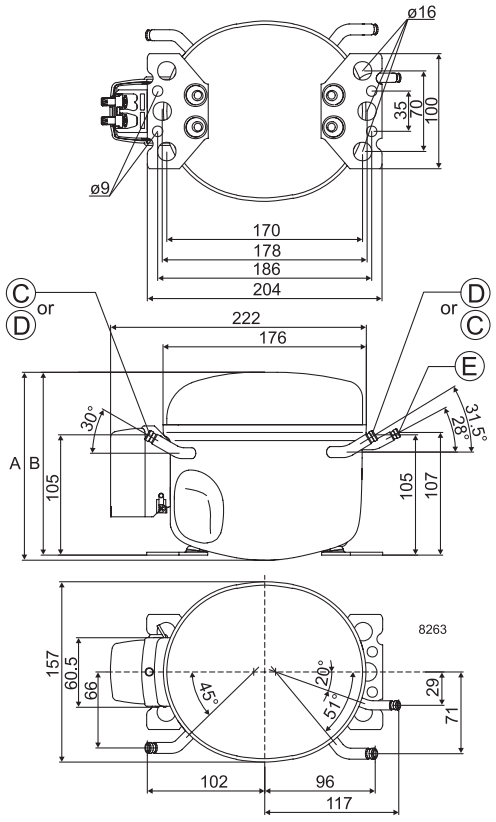

EN 12900 Household (CECOMAF) 220V, 50Hz, static cooling, PTC consumption incl.

Evap. temp in °C	-45	-40	-35	-30	-25	-23.3	-20	-15	-10	-6.7	-5	0	5	7.2	10	15	20
Capacity in W			66	89	120	133	160	208	264								
Power cons. in W			97	116	136	143	158	182	207								
Current cons. in A			0.87	0.91	0.96	0.98	1.03	1.11	1.20								
COP in W/W			0.68	0.77	0.88	0.92	1.01	1.14	1.28								

ASHRAE LBP 220V, 50Hz, static cooling, PTC consumption incl.

Evap. temp in °C	-45	-40	-35	-30	-25	-23.3	-20	-15	-10	-6.7	-5	0	5	7.2	10	15	20
Capacity in W			81	109	148	163	197	256	326								
Power cons. in W			97	116	136	143	158	182	207								
Current cons. in A			0.87	0.91	0.96	0.98	1.03	1.11	1.20								
COP in W/W			0.84	0.94	1.09	1.14	1.24	1.41	1.57								

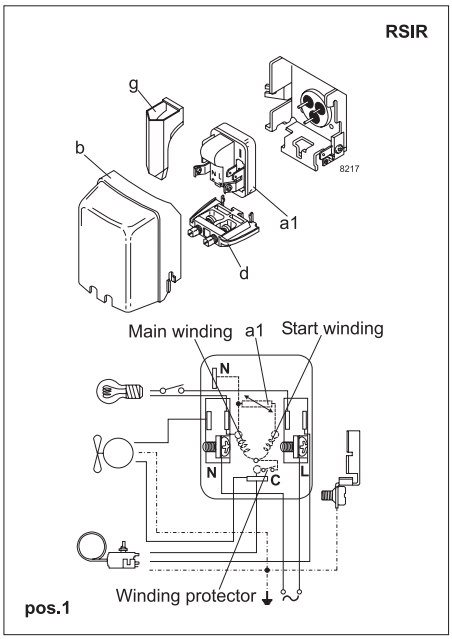

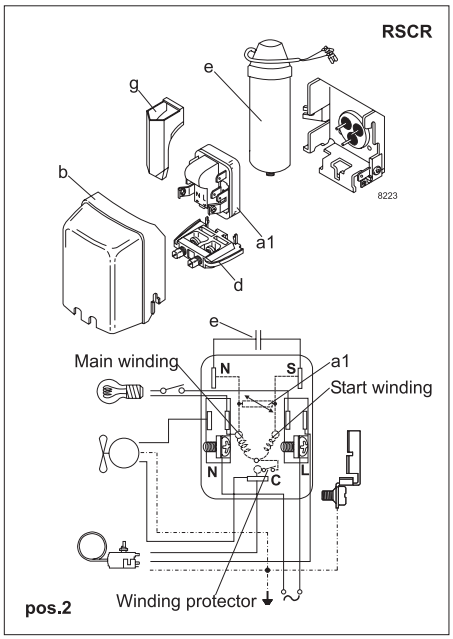

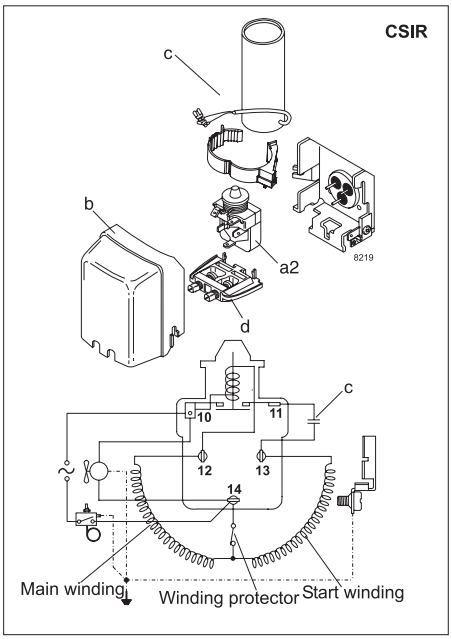

Accessories for	TLS7F	Figure	Code number
PTC starting device	6.3 mm spade connectors	a1 (pos. 1)	103N0011
	4.8 mm spade connectors		103N0018
PTC starting device	6.3 mm spade connectors	a1 (pos. 2)	103N0016
	4.8 mm spade connectors		103N0021
Starting relay	6.3 mm spade connectors	a2	117U6000
Start capacitor 60 µF	6.3 mm spade connectors	c	117U5014
Cover		b	103N2010
Cord relief		d	103N1010
Run capacitor	6.3 mm spade connectors	e	117-7117
4 µF (optional)	4.8 mm spade connectors		117-7119
Protection screen for PTC		g	103N0476

Test conditions	EN 12900/ CECOMAF	ASHRAE
Condensing temperature	55°C	54.4°C
Ambient temperature	32°C	32°C
Suction gas temperature	32°C	32°C
Liquid temperature	no subcooling	32°C

Mounting accessories		Code number
Bolt joint for one comp.	Ø: 16 mm	118-1917
Bolt joint in quantities	Ø: 16 mm	118-1918
Snap-on in quantities	Ø: 16 mm	118-1919

Secop can accept no responsibility for possible errors in catalogues, brochures and other printed material. Secop reserves the right to alter its products without notice. This also applies to products already on order provided that such alterations can be made without subsequential changes being necessary in specifications already agreed. All trademarks in this material are property of the respective companies. Secop and the Secop logotype are trademarks of Secop GmbH. All rights reserved. **www.secop.com**